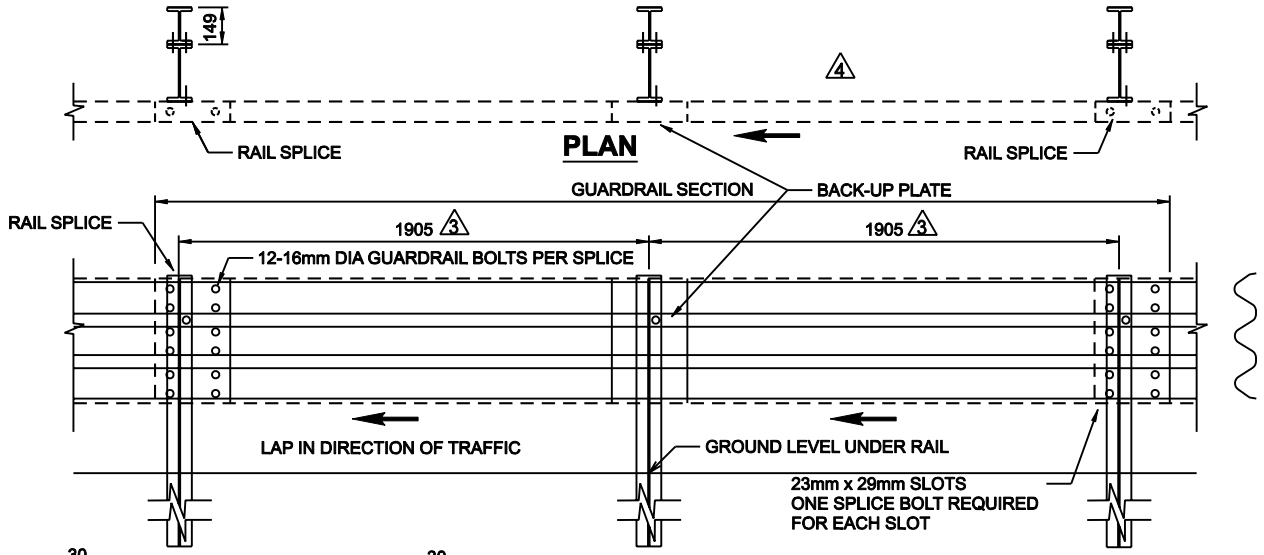

ELEVATION

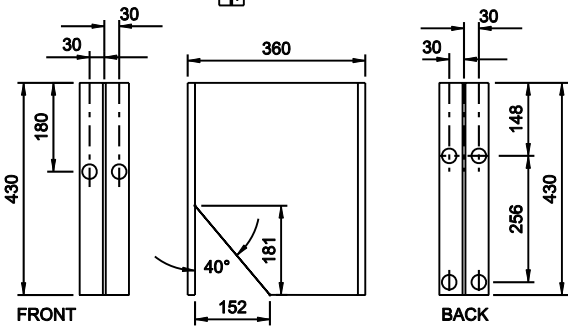

M360 x 25.6 STEEL STEEL OFFSET BLOCK

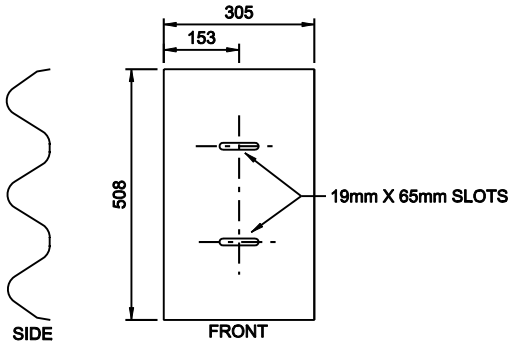

THRIE BEAM BACK-UP PLATE DETAILS

Notes: 4

1. ALL HARDWARE TO BE HOT-DIP GALVANIZED
2. DETAILS ARE NOT TO SCALE
3. DIRECTION OF TRAFFIC INDICATED BY ←
4. REFER TO A.T. ROADSIDE DESIGN GUIDE FOR DESIGN TOLERANCE OF INSTALLATION HEIGHT.
5. 10:1 SLOPE CAN BE CONSTRUCTED IN THE PAVEMENT SIDESLOPE ZONE WITH ACP, GBC AND/OR APPROVED FREE DRAINING MATERIAL AS DIRECTED BY THE ENGINEER.

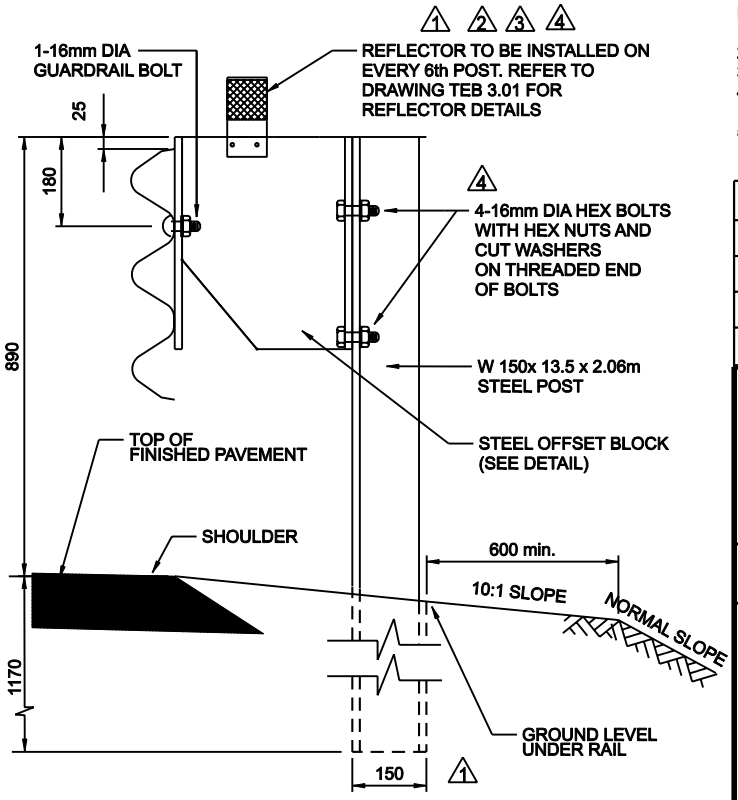

POST AND SPACER DETAIL

BOLTS ARE TO BE INSTALLED AS SHOWN SO THAT THE THREADED END OF THE BOLTS AND NUTS ARE PLACED AWAY FROM TRAFFIC SIDE OF RAIL.

No.	REVISIONS	BY	DATE
4	REFLECTOR NOTE, NUMBER AND TYPE OF BOLTS AND NOTES.	P.M.	8 JUL 09
3	REFLECTOR NOTE & POST SPACING REVISED	B.K.	5 JUN 07
2	REFLECTOR NOTE REVISED	B.K.	08/11/06
1	DIMENSION AND REFLECTOR DETAILS	B.K.	12/07/05

Approved:

Original signed by
Allan Kwan

Executive Director,
Technical Standards Branch

Date: January, 2005

Alberta Transportation

MODIFIED THRIE BEAM GUARDRAIL

Prepared By:	Checked By:	Scale:	Dwg No.:
M.T	B.K	N.T.S.	TEB 3.70