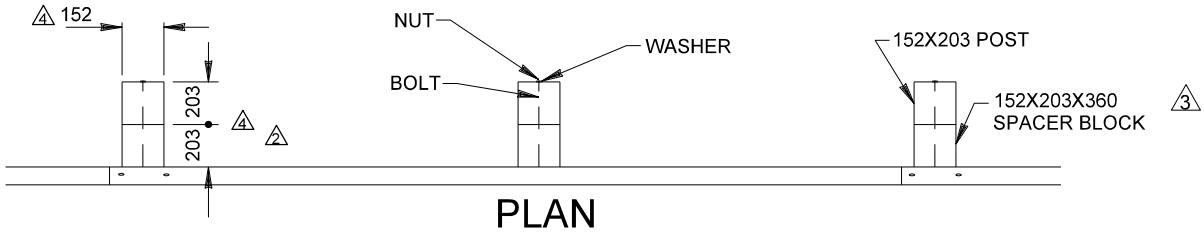

PLAN

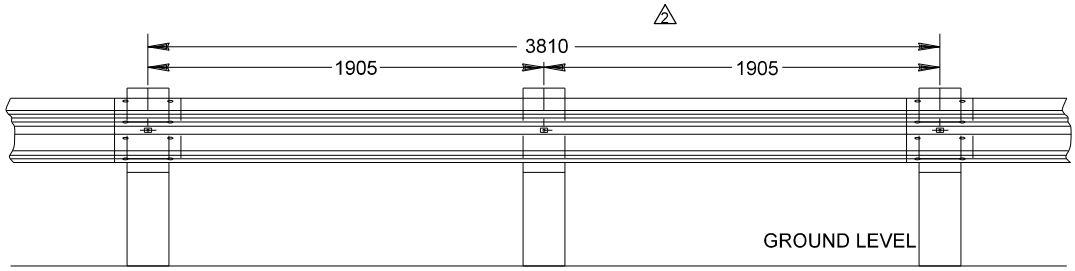

ELEVATION

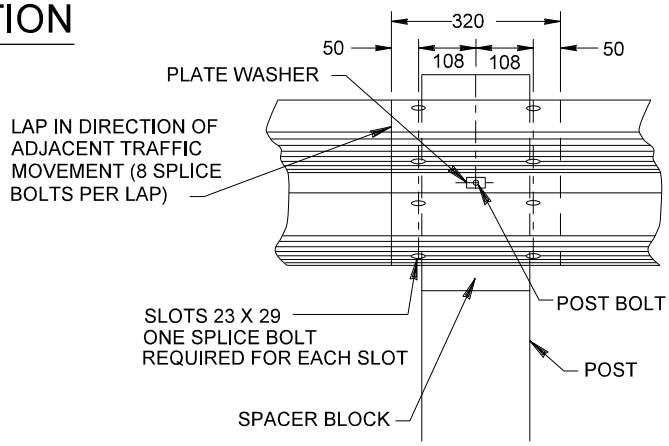

RAIL SPLICE DETAIL

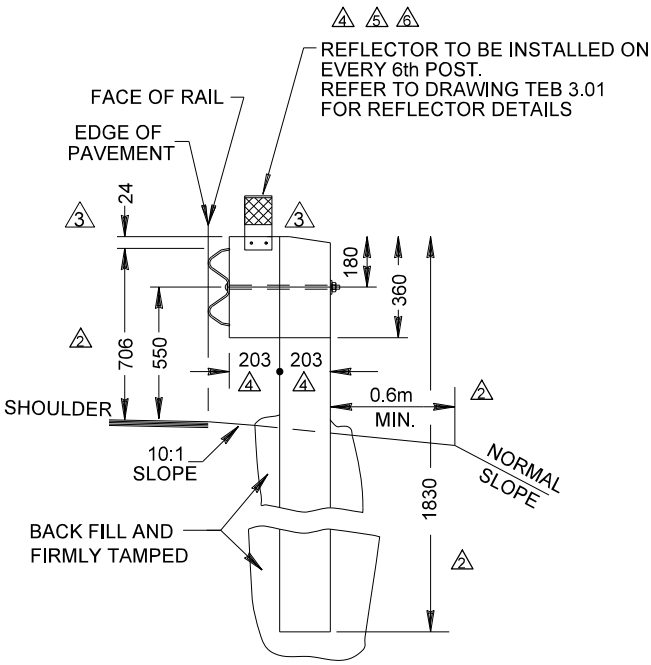

POST AND SPACER DETAILS

2

NOTE: THE STANDARD POST LENGTH FOR STRONG POST SYSTEM IS 1830mm (6'0"). OTHER POST LENGTHS MAY BE USED IF DIRECTED BY THE ENGINEER.

All dimensions are in millimetres unless otherwise indicated.

No.	REVISIONS	BY	DATE
6	Reflector Note Revised	PM	8 JUL 09
5	Reflector Note Revised (Include Type IX)	BK	03/23/07
4	Reflector Note and Added Post Dimensions	BK	08/11/06
3	Dimensions and Reflector Detail	BK	12/07/05
2	Notes and Dimensions	BK	12-04
1			06-95

Approved:
Original signed by
A.D. Cherwenuk

Executive Director,
Technical Standards Branch

Date: DECEMBER 11, 1992

Alberta Transportation

SUPERSEDED

STRONG POST W-BEAM BLOCKED-OUT GUARDRAIL

Prepared By: M.T	Checked By: B.K	Scale: N.T.S.	Dwg No.: TEB 3.09