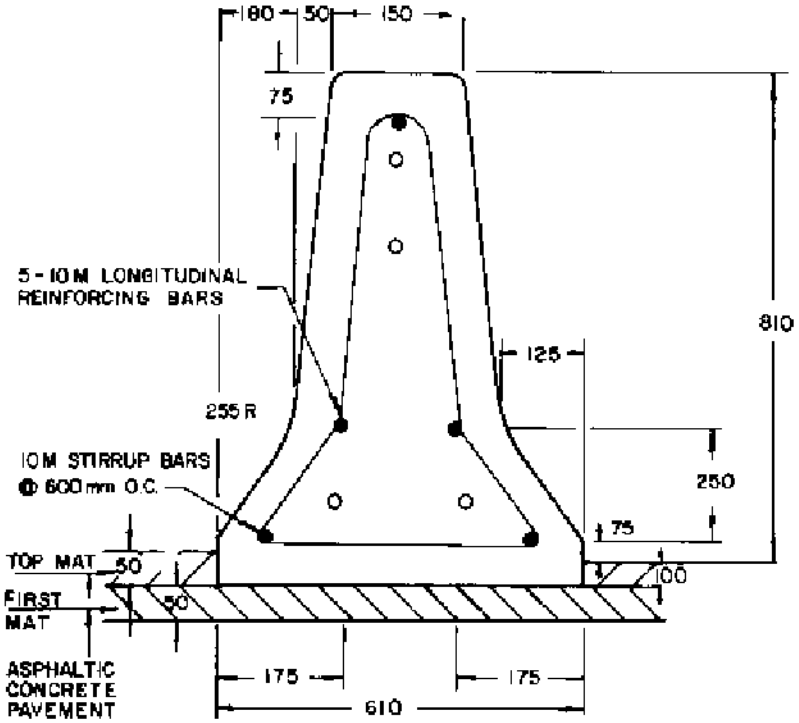

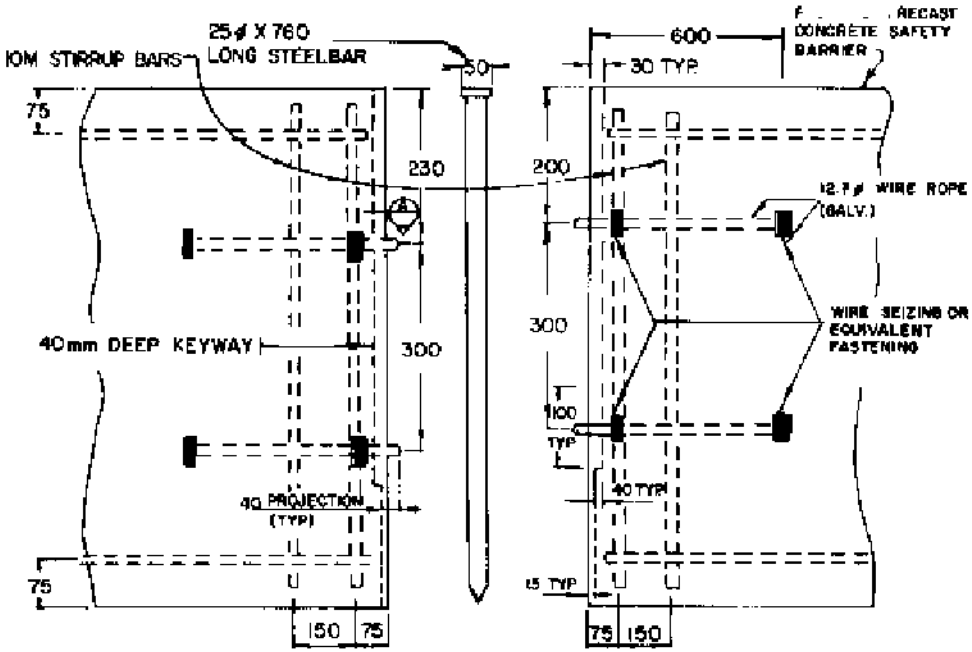

1. ALL CONCRETE SHALL BE 40 Mpa AT 28 DAYS.
2. ALL REINFORCEMENT SHALL BE EPOXY COATED REINFORCING BARS.
3. ALL EXPOSED CONCRETE SHALL HAVE A SMOOTH SURFACE.
4. EXPOSED SURFACES SHALL HAVE 20mm CHAMFER OR FILLET OR AS OTHERWISE SPECIFIED.
5. ALL SURFACES SHALL BE FORMED WITH OILED PLYWOOD OR STEEL FORMED FINISH
6. ALL VOIDS ARE TO BE CAPPED AND WATERPROOFED
7. EXPOSED SURFACES SHALL HAVE AN APPROVED SEALING SOLUTION APPLIED

ALL DIMENSIONS ARE IN MILLEMETRES UNLESS OTHERWISE NOTED

FOR RETROFIT ONLY

No.	REVISIONS	BY	DATE
2	.	.	.
1	"CURB" REMOVED FROM TITLE	B.K.	04-17-07

Effective Date: 1997

Alberta Infrastructure and Transportation

REINFORCED CONCRETE MEDIAN BARRIER 1

NJ SHAPE

Prepared By: N.N.	Checked By: B.K	Scale: N.T.S.	Dwg No.: CB6-4.3M1A